The Timken Company
4500 Mt Pleasant St. NW
N. Canton, OH 44720
Phone: (234) 262-3000
E-Mail: CustomerCAD@timken.com (mailto:CustomerCAD@timken.com) • **Web site:** www.timken.com (http://www.timken.com)

Part Number NCF2924VC3, Cylindrical Roller Radial Bearings - Full Complement



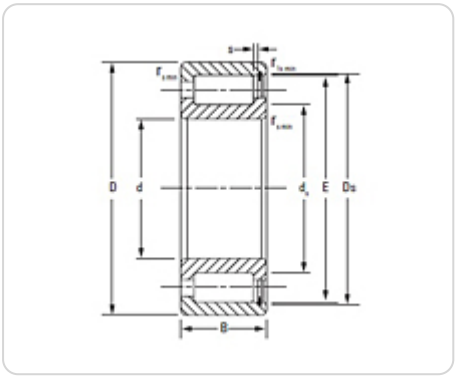

Key Features

- High radial load capacity
- Full-complement construction, no cage included
- Can manage axial loads in one direction and small axial displacement
- Sold as a completely unitized assembly
- Enhanced operational reliability due to optimized bearing design and reduced heat generation
- Long service life

Key Dimensions

Bore (d)	120 mm
O.D. (D)	165 mm 6.4961 in
Width (B)	1.063 in 27 mm
Dynamic Radial Load Rating - 1M Revs (C1)[1]	188000 N 42400 lbf

Other Dimensions

Weight	1.7 Kg 3.8 lb
Shaft Backing Shoulder Dia.	130 mm 5.1200 in
Housing Backing Shoulder Dia.	155 mm 6.1000 in
Max Shaft Fillet Radius LF ID	0.040 in 1.0 mm
Max Shaft Fillet Radius RF ID	1.1 in 0.040 mm
Max Housing Fillet Radius LF OD	1.1 in 0.040 mm
Max Housing Fillet Radius RF OD	0.040 in 1.0 mm
DUR/DOR F/E	154 mm 6.0630 in
Permissible Axial Displacement (S3)[2]	1.55 mm 0.061 in

Ratings

Static Radial Load Rating (C0)	297000 N 66800 lbf
Thermal Reference Speed - Oil	1800 rpm
Thermal Reference Speed - Grease	1500 rpm

Factors

Geometry Factor (Cg)	0.15 0.1500 mm

[1] Based on 1 x 10^6 revolutions L_{10} life, for the ISO life calculation method.

[2] Permissible axial displacement from normal position of one bearing ring in relation to the other.