The Timken Company
4500 Mt Pleasant St. NW
N. Canton, OH 44720
Phone: (234) 262-3000
E-Mail: CustomerCAD@timken.com (mailto:CustomerCAD@timken.com) • **Web site:** www.timken.com (http://www.timken.com)

Part Number NCF1888VC3, Cylindrical Roller Radial Bearings - Full Complement



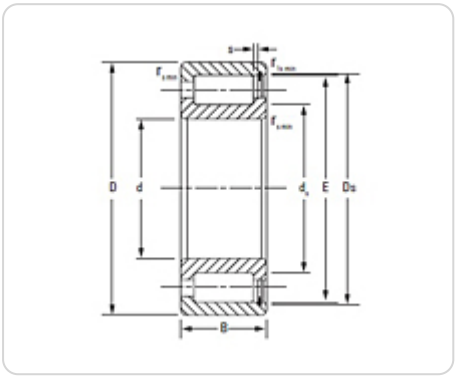

Key Features

- High radial load capacity
- Full-complement construction, no cage included
- Can manage axial loads in one direction and small axial displacement
- Sold as a completely unitized assembly
- Enhanced operational reliability due to optimized bearing design and reduced heat generation
- Long service life

Key Dimensions

Bore (d)	440 mm
O.D. (D)	540 mm 21.2598 in
Width (B)	1.811 in 46 mm
Dynamic Radial Load Rating - 1M Revs (C1)[1]	746000 N 168000 lbf

Other Dimensions

Weight	22.3 Kg 49.160 lb
Shaft Backing Shoulder Dia.	463.5 mm 18.2500 in
Housing Backing Shoulder Dia.	516.5 mm 20.3300 in
Max Shaft Fillet Radius LF ID	0.060 in 1.5 mm
Max Shaft Fillet Radius RF ID	2.1 in 0.080 mm
Max Housing Fillet Radius LF OD	2.1 in 0.080 mm
Max Housing Fillet Radius RF OD	0.060 in 1.5 mm
DUR/DOR F/E	515.5 mm 20.2953 in
Permissible Axial Displacement (S3)[2]	3.50 mm 0.138 in

Ratings

Static Radial Load Rating (C0)	1550000 N 347000 lbf
Thermal Reference Speed - Oil	310 rpm
Thermal Reference Speed - Grease	260 rpm

Factors

Geometry Factor (Cg)	0.2120 mm

[1] Based on 1 x 10^6 revolutions L_{10} life, for the ISO life calculation method.

[2] Permissible axial displacement from normal position of one bearing ring in relation to the other.