The Timken Company
4500 Mt Pleasant St. NW
N. Canton, OH 44720
Phone: (234) 262-3000
E-Mail: CustomerCAD@timken.com (mailto:CustomerCAD@timken.com) • **Web site:** www.timken.com (http://www.timken.com)

Part Number 62207-2RS, Wide Section Ball Bearings (62000, 63000)



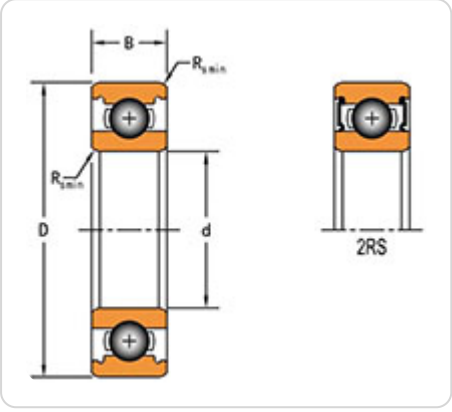

Timken's deep groove ball bearings deliver reliable performance in a wide range of applications and conditions. With super-finished raceways and controlled geometries, our premium design helps ensure consistent quality.

Key Dimensions

Clearance	C0 (Normal)
Bore (d)	35.000 mm
Features	Contact Seals
O.D. (D)	72.000 mm
Width (B)	23 mm
Dynamic Radial Load Rating - 1M Revs (C1)	25500 N

Other Dimensions

Radius Rs min	1.1 mm

Ratings

Static Radial Load Rating (C0)	15300 N
Limiting Speed - Grease	6300 rpm