The Timken Company
4500 Mt Pleasant St. NW
N. Canton, OH 44720
Phone: (234) 262-3000
E-Mail: CustomerCAD@timken.com (mailto:CustomerCAD@timken.com) • **Web site:** www.timken.com (http://www.timken.com)

Part Number 33281-903A3, Tapered Roller Bearings - TDO (Tapered Double Outer) Imperial



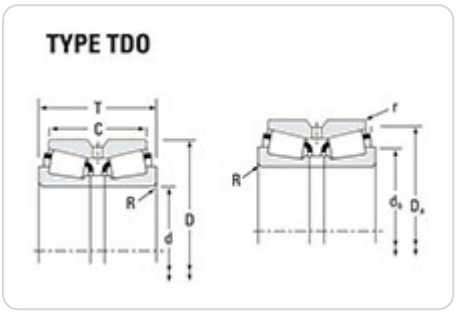

Key Features

- Available in single, double and multi-row configurations, as well as proprietary sizes
- Designed in collaboration with OE engineers to design, engineer and test bearings for premium performance in many applications
- Power dense designs allow for heavier loads and can help extend bearing life
- Optimized internal geometry lower torque and operating temperatures to extend lubrication system life

- Can be designed to withstand high-corrosive, high-temperature and vacuum or low-lubrication environments with proprietary enhancements

Key Dimensions

Cone Part Number	33281
Cup Part Number	33462D
Bore (d)	2.8125 in 71.438 mm
O.D. (D)	4.6250 in 117.475 mm
Width (T)	2.6249 in 66.672 mm
Dynamic Radial Load Rating - 1M Revs (C1) [1]	54200 lbf 241000 N
Dynamic Radial Load Rating - 90M Revs (C90) [2]	8060 lbf 35900 N
Dynamic Radial Load Rating 2-Row - 90M Revs (C90-2row)[3]	14000 lbf 62400 N
e Factor [4]	0.44
K Factor [5]	1.34
Series	33000

Other Dimensions

Outer Ring Width (C)	2.1250 in 53.975 mm
Max Shaft Fillet Radius[6]	0.14 in 3.600 mm
Max Housing Fillet Radius[7]	0.030 in 0.8 mm
Shaft Backing Shoulder Diameter - Backface (db)	3.43 in 87 mm
Housing Backing Shoulder Diameter - Frontface (Da)	4.45 in 112.01 mm
Cage Location Relative to Backface (Aa)	0.07 in 1.8 mm
Effective Center Location[8]	-0.11 in -2.8 mm
Inner Ring Width (B)	1.1875 in 30.163 mm
Weight	5.91 lb 2.683 Kg

Ratings

Dynamic Axial Rating - 90M Revs (Ca90)[9]	6020 lbf 26800 N

Factors

Y1 Factor [10]	1.55
Y2 Factor [11]	2.31
Geometry Factor (Cg) [12]	0.116

[1] Based on 1 x 10^6 revolutions L_{10} life, for the ISO life calculation method.

[2] Based on 90 x 10^6 revolutions L_{10} life, for The Timken Company life calculation method. C_{90} and C_{a90} are radial and thrust values.

[3] Based on 90 x 10^6 revolutions L_{10} life, for The Timken Company life calculation method. C_{90} and C_{a90} are radial and thrust values for a single-row, $C_{90(2)}$ is the two-row radial value.

[4] These factors apply for both inch and metric calculations. Consult your Timken representative for instruction on use.

[5] These factors apply for both inch and metric calculations. Consult your Timken representative for instruction on use.

[6] These maximum fillet radii will be cleared by the bearing corners.

[7] These maximum fillet radii will be cleared by the bearing corners.

[8] Negative value indicates effective center inside cone backface.

[9] Based on 90 x 10^6 revolutions L_{10} life, for The Timken Company life calculation method. C_{90} and C_{a90} are radial and thrust values for a single-row, $C_{90(2)}$ is the two-row radial value.

[10] These factors apply for both inch and metric calculations. Consult your Timken representative for instruction on use.

[11] These factors apply for both inch and metric calculations. Consult your Timken representative for instruction on use.

[12] Geometry constant for Lubrication Life Adjustment Factor a3l.