The Timken Company
4500 Mt Pleasant St. NW
N. Canton, OH 44720
Phone: (234) 262-3000
E-Mail: CustomerCAD@timken.com (mailto:CustomerCAD@timken.com) • **Web site:** www.timken.com (http://www.timken.com)

Part Number 23934EMW33C3, Spherical Roller Bearings - Brass Cage



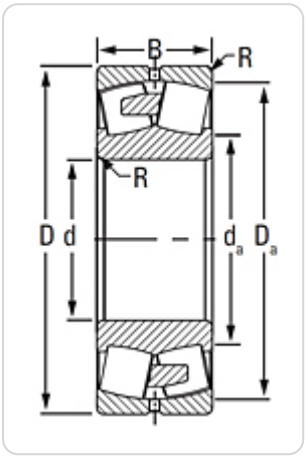

Key Features

- Longer bearing life achieved from higher capacity (vs. competitors)
- Longer lubrication life achieved from lower operating temperatures due to reduced internal friction and running torque from cage guided rollers
- Better contaminant purging from slots on cage face helps extend bearing life

- Greater fatigue strength and increased wear resistance provide tougher protection against shock and acceleration loading from a brass cage

Key Dimensions

Bore (d)	170 mm
O.D. (D)	230 mm 9.0551 in
Width (B)	45 mm 1.7717 in
Dynamic Radial Load Rating - 1M Revs (C1)	453000 N 102000 lbf
e Factor[1]	0.17

Other Dimensions

Max Shaft Fillet Radius[2]	2.0 mm 0.080 in
Shaft Backing Shoulder Diameter	184 mm 7.2000 in
Housing Backing Shoulder Diameter	217 mm 8.600 in
Design Unit	Metric

Ratings

Static Radial Load Rating (C0)	716000 N 161000 lbf
Thermal Reference Speed - Grease	1900 rpm
Thermal Reference Speed - Oil[3]	2400 rpm

Factors

Y0 Factor[4]	3.97
Y1 Factor [5]	4.07
Y2 Factor [6]	6.05
Geometry Factor (Cg) [7]	0.0895

[1] These factors apply for both inch and metric calculations. Consult your Timken representative for instruction on use.

[2] Maximum housing fillet radius that bearing corners will clear.

[3] See thermal speed ratings in the engineering section.

[4] These factors apply for both inch and metric calculations. See engineering

[5] These factors apply for both inch and metric calculations. Consult your Timken representative for instruction on use.

[6] These factors apply for both inch and metric calculations. Consult your Timken representative for instruction on use.

[7] Geometry constant for Lubrication Life Adjustment Factor a3l.