**The Timken Company**
4500 Mt Pleasant St. NW
N. Canton, OH 44720
**Phone:** (234) 262-3000
**E-Mail:** CustomerCAD@timken.com (mailto:CustomerCAD@timken.com) • **Web site:** www.timken.com (http://www.timken.com)



# Part Number 22338EMBW33C2, Spherical Roller Bearings - Brass Cage



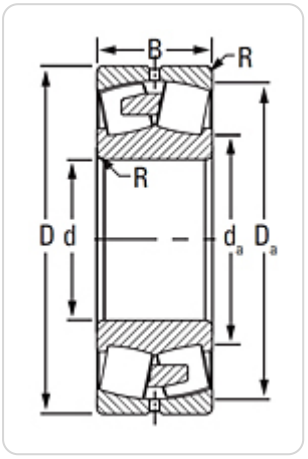


## Key Features

- Longer bearing life achieved from higher capacity (vs. competitors)
- Longer lubrication life achieved from lower operating temperatures due to reduced internal friction and running torque from cage guided rollers
- Better contaminant purging from slots on cage face helps extend bearing life

- Greater fatigue strength and increased wear resistance provide tougher protection against shock and acceleration loading from a brass cage

## Key Dimensions

| | |
|---|---|
| **Bore (d)** | 190 mm |
| **O.D. (D)** | 400 mm<br>15.7480 in |
| **Width (B)** | 132 mm<br>5.1969 in |
| **Dynamic Radial Load Rating - 1M Revs (C1)** | 2380000 N<br>534000 lbf |
| **e Factor**[1] | 0.32 |

## Other Dimensions

| | |
|---|---|
| **Max Shaft Fillet Radius**[2] | 4 mm<br>0.160 in |
| **Shaft Backing Shoulder Diameter** | 245 mm<br>9.6000 in |
| **Housing Backing Shoulder Diameter** | 361.000 mm<br>14.200 in |
| **Design Unit** | Metric |

## Ratings

| | |
|---|---|
| **Static Radial Load Rating (C0)** | 2830000 N<br>635000 lbf |
| **Thermal Reference Speed - Grease** | 1100 rpm |
| **Thermal Reference Speed - Oil**[3] | 1200 rpm |

# Factors

| | |
|---|---|
| **Y0 Factor**[4] | 2.07 |
| **Y1 Factor** [5] | 2.12 |
| **Y2 Factor** [6] | 3.15 |
| **Geometry Factor (Cg)** [7] | 0.1021 |

[1] These factors apply for both inch and metric calculations. Consult your Timken representative for instruction on use.

[2] Maximum housing fillet radius that bearing corners will clear.

[3] See thermal speed ratings in the engineering section.

[4] These factors apply for both inch and metric calculations. See engineering

[5] These factors apply for both inch and metric calculations. Consult your Timken representative for instruction on use.

[6] These factors apply for both inch and metric calculations. Consult your Timken representative for instruction on use.

[7] Geometry constant for Lubrication Life Adjustment Factor a3l.