The Timken Company
4500 Mt Pleasant St. NW
N. Canton, OH 44720
Phone: (234) 262-3000
E-Mail: CustomerCAD@timken.com (mailto:CustomerCAD@timken.com) • **Web site:** www.timken.com (http://www.timken.com)

Part Number 22332EJW33, Spherical Roller Bearings - Steel Cage



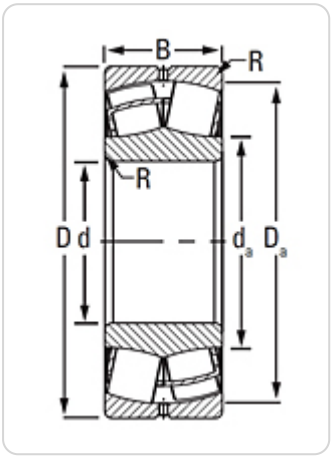

Key Features

- Longer bearing life achieved from higher capacity (vs. competitors)
- Longer lubrication life achieved from lower operating temperatures due to reduced internal friction and running torque from cage guided rollers
- Better contaminant purging from slots on cage face helps extend bearing life

- Greater fatigue strength and increased wear resistance provide tougher protection against shock and acceleration loading from a hardened steel cage

Key Dimensions

UPC Code	087796027626
Bore (d)	160 mm
O.D. (D)	340 mm 13.3858 in
Width (B)	114 mm 4.4882 in
Dynamic Radial Load Rating - 1M Revs (C1)	1890000 N 424000 lbf
e Factor[1]	0.32

Other Dimensions

Max Shaft Fillet Radius[2]	3 mm 0.120 in
Shaft Backing Shoulder Diameter	207 mm 8.1000 in
Housing Backing Shoulder Diameter	306 mm 12.000 in
Design Unit	Metric

Ratings

Static Radial Load Rating (C0)	2250000 N 507000 lbf
Thermal Reference Speed - Oil[3]	1500 rpm
Thermal Reference Speed - Grease	1300 rpm

Factors

Y0 Factor[4]	2.04
Y1 Factor [5]	2.09
Y2 Factor[6]	3.11
Geometry Factor (Cg) [7]	0.0920

[1] These factors apply for both inch and metric calculations. Consult your Timken representative for instruction on use.

[2] Maximum housing fillet radius that bearing corners will clear.

[3] See thermal speed ratings in the engineering section.

[4] These factors apply for both inch and metric calculations. See engineering

[5] These factors apply for both inch and metric calculations. Consult your Timken representative for instruction on use.

[6] These factors apply for both inch and metric calculations. Consult your Timken representative for instruction on use.

[7] Geometry constant for Lubrication Life Adjustment Factor a3l.