**The Timken Company**
4500 Mt Pleasant St. NW
N. Canton, OH 44720
**Phone:** (234) 262-3000
**E-Mail:** CustomerCAD@timken.com (mailto:CustomerCAD@timken.com) • **Web site:** www.timken.com (http://www.timken.com)



# Part Number 22222EMW33, Spherical Roller Bearings - Brass Cage



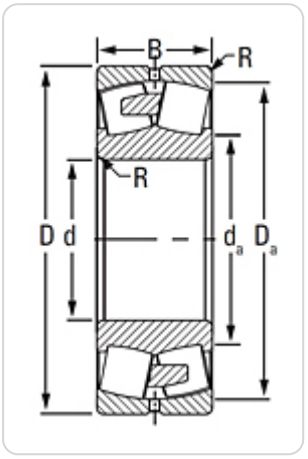


## Key Features

- Longer bearing life achieved from higher capacity (vs. competitors)
- Longer lubrication life achieved from lower operating temperatures due to reduced internal friction and running torque from cage guided rollers
- Better contaminant purging from slots on cage face helps extend bearing life

- Greater fatigue strength and increased wear resistance provide tougher protection against shock and acceleration loading from a brass cage

## Key Dimensions

| | |
|---|---|
| **Bore (d)** | 110 mm |
| **O.D. (D)** | 200 mm<br>7.874 in |
| **Width (B)** | 53 mm<br>2.0866 in |
| **Dynamic Radial Load Rating - 1M Revs (C1)** | 555000 N<br>125000 lbf |
| **e Factor**[1] | 0.25 |

## Other Dimensions

| | |
|---|---|
| **Max Shaft Fillet Radius**[2] | 2.0 mm<br>0.080 in |
| **Shaft Backing Shoulder Diameter** | 133.000 mm<br>5.2000 in |
| **Housing Backing Shoulder Diameter** | 182 mm<br>7.200 in |
| **Design Unit** | Metric |

## Ratings

| | |
|---|---|
| **Static Radial Load Rating (C0)** | 653000 N<br>147000 lbf |
| **Thermal Reference Speed - Grease** | 2900 rpm |
| **Thermal Reference Speed - Oil**[3] | 3500 rpm |

# Factors

| | |
|---|---|
| **Y0 Factor**[4] | 2.67 |
| **Y1 Factor** [5] | 2.73 |
| **Y2 Factor** [6] | 4.06 |
| **Geometry Factor (Cg)** [7] | 0.0742 |

[1] These factors apply for both inch and metric calculations. Consult your Timken representative for instruction on use.

[2] Maximum housing fillet radius that bearing corners will clear.

[3] See thermal speed ratings in the engineering section.

[4] These factors apply for both inch and metric calculations. See engineering

[5] These factors apply for both inch and metric calculations. Consult your Timken representative for instruction on use.

[6] These factors apply for both inch and metric calculations. Consult your Timken representative for instruction on use.

[7] Geometry constant for Lubrication Life Adjustment Factor a3l.