**The Timken Company**
4500 Mt Pleasant St. NW
N. Canton, OH 44720
**Phone:** (234) 262-3000
**E-Mail:** CustomerCAD@timken.com (mailto:CustomerCAD@timken.com) • **Web site:** www.timken.com (http://www.timken.com)



# Part Number 22207EJW33C2, Spherical Roller Bearings - Steel Cage



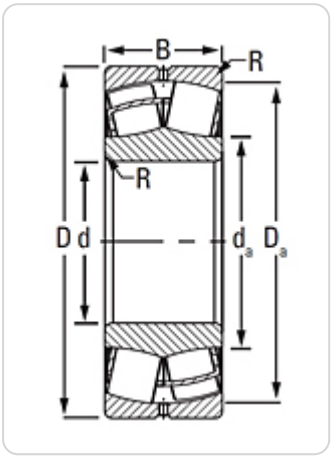


## Key Features

- Longer bearing life achieved from higher capacity (vs. competitors)
- Longer lubrication life achieved from lower operating temperatures due to reduced internal friction and running torque from cage guided rollers
- Better contaminant purging from slots on cage face helps extend bearing life

- Greater fatigue strength and increased wear resistance provide tougher protection against shock and acceleration loading from a hardened steel cage

## Key Dimensions

| | |
|---|---|
| **UPC Code** | 087796304307 |
| **Bore (d)** | 35.000 mm |
| **O.D. (D)** | 72.000 mm<br>2.8346 in |
| **Width (B)** | 23 mm<br>0.9055 in |
| **Dynamic Radial Load Rating - 1M Revs (C1)** | 90500 N<br>20300 lbf |
| **e Factor**[1] | 0.31 |

## Other Dimensions

| | |
|---|---|
| **Max Shaft Fillet Radius**[2] | 1.00 mm<br>0.040 in |
| **Shaft Backing Shoulder Diameter** | 45.000 mm<br>1.800 in |
| **Housing Backing Shoulder Diameter** | 65.00 mm<br>2.600 in |
| **Design Unit** | Metric |

## Ratings

| | |
|---|---|
| **Static Radial Load Rating (C0)** | 87700 N<br>19700 lbf |
| **Thermal Reference Speed - Oil**[3] | 8700 rpm |
| **Thermal Reference Speed - Grease** | 7000 rpm |

# Factors

| | |
|---|---|
| **Y0 Factor**[4] | 2.16 |
| **Y1 Factor** [5] | 2.21 |
| **Y2 Factor**[6] | 3.29 |
| **Geometry Factor (Cg)** [7] | 0.041 |

[1] These factors apply for both inch and metric calculations. Consult your Timken representative for instruction on use.

[2] Maximum housing fillet radius that bearing corners will clear.

[3] See thermal speed ratings in the engineering section.

[4] These factors apply for both inch and metric calculations. See engineering

[5] These factors apply for both inch and metric calculations. Consult your Timken representative for instruction on use.

[6] These factors apply for both inch and metric calculations. Consult your Timken representative for instruction on use.

[7] Geometry constant for Lubrication Life Adjustment Factor a3l.