The Timken Company
4500 Mt Pleasant St. NW
N. Canton, OH 44720
Phone: (234) 262-3000
E-Mail: CustomerCAD@timken.com (mailto:CustomerCAD@timken.com) • **Web site:** www.timken.com (http://www.timken.com)

Part Number 21312EJW33, Spherical Roller Bearings - Steel Cage



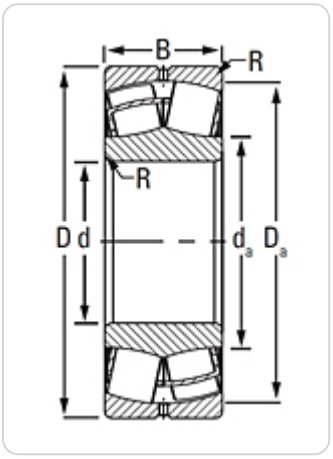

Key Features

- Longer bearing life achieved from higher capacity (vs. competitors)
- Longer lubrication life achieved from lower operating temperatures due to reduced internal friction and running torque from cage guided rollers
- Better contaminant purging from slots on cage face helps extend bearing life

- Greater fatigue strength and increased wear resistance provide tougher protection against shock and acceleration loading from a hardened steel cage

Key Dimensions

UPC Code	087796022591
Bore (d)	60 mm
O.D. (D)	130.000 mm 5.1181 in
Width (B)	31 mm 1.2205 in
Dynamic Radial Load Rating - 1M Revs (C1)	225000 N 50500 lbf
e Factor[1]	0.23

Other Dimensions

Max Shaft Fillet Radius[2]	2.0 mm 0.080 in
Shaft Backing Shoulder Diameter	80.000 mm 3.200 in
Housing Backing Shoulder Diameter	116.000 mm 4.600 in
Design Unit	Metric

Ratings

Static Radial Load Rating (C0)	219000 N 49200 lbf
Thermal Reference Speed - Oil[3]	2900 rpm
Thermal Reference Speed - Grease	2500 rpm

Factors

Y0 Factor[4]	2.84
Y1 Factor [5]	2.91
Y2 Factor[6]	4.33
Geometry Factor (Cg) [7]	0.0542

[1] These factors apply for both inch and metric calculations. Consult your Timken representative for instruction on use.

[2] Maximum housing fillet radius that bearing corners will clear.

[3] See thermal speed ratings in the engineering section.

[4] These factors apply for both inch and metric calculations. See engineering

[5] These factors apply for both inch and metric calculations. Consult your Timken representative for instruction on use.

[6] These factors apply for both inch and metric calculations. Consult your Timken representative for instruction on use.

[7] Geometry constant for Lubrication Life Adjustment Factor a3l.