The Timken Company
4500 Mt Pleasant St. NW
N. Canton, OH 44720
Phone: (234) 262-3000
E-Mail: CustomerCAD@timken.com (mailto:CustomerCAD@timken.com) • **Web site:** www.timken.com (http://www.timken.com)

Part Number 16003-ZZ, Narrow Section Ball Bearings (16000, 16100)



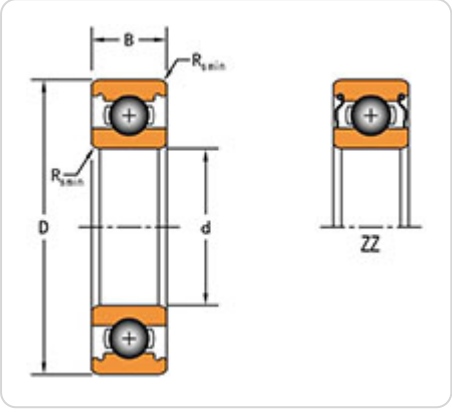

Timken's deep groove ball bearings deliver reliable performance in a wide range of applications and conditions. With super-finished raceways and controlled geometries, our premium design helps ensure consistent quality.

Key Dimensions

Clearance	C0 (Normal)
Bore (d)	17.000 mm
Features	Shields
O.D. (D)	35 mm
Width (B)	8 mm
Dynamic Radial Load Rating - 1M Revs (C1)	6000 N

Other Dimensions

Radius Rs min	0.30 mm

Ratings

Static Radial Load Rating (C0)	3300 N
Limiting Speed - Grease	17000 rpm
Limiting Speed - Oil	24000 rpm